DRAWING MADE IN THIRD ANGLE PROJECTION

THIS DRAWING IS UNPUBLISHED. RELEASED FOR PUBLICATION ,19 .

© COPYRIGHT 19 BY AMP INCORPORATED. ALL INTERNATIONAL RIGHTS RESERVED.

LOC	DIST	P	F
AF	50		

REVISIONS

ZONE	LTR	DESCRIPTION	DATE	APPD
	E	OBS -2 PER 0520-94	10/6/94	JR/PD

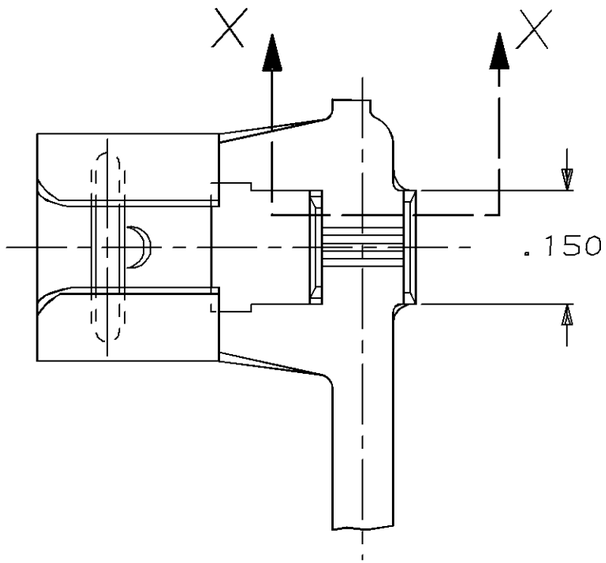

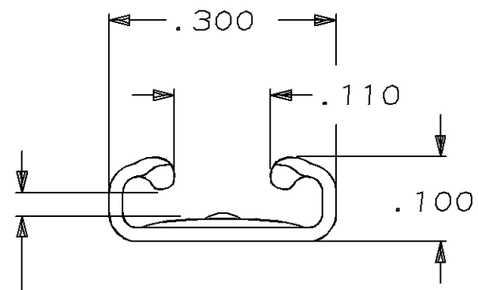

FITS .250 SERIES FASTON TAB

VIEW Y–Y

1 CONTINUOUS STRIP ON REELS

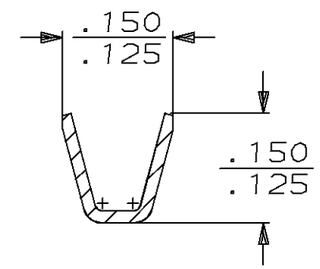

SECTION X–X

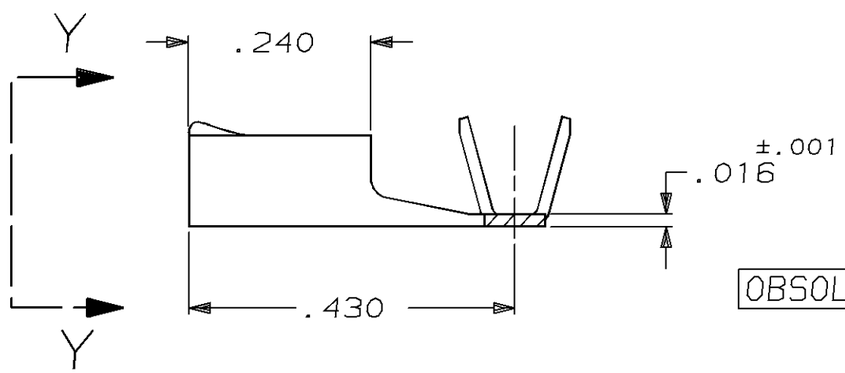

OBSOLETE	PRE-TIN	18–14	.032	~~63508-2~~
	———	18–14	.032	63508-1
	FINISH	WIRE SIZE	MATING TAB THK ±.001	PART NO

.218	F	.110	.070	14
			.061	16
			.055	18
STRIP LENGTH ±.015	TYPE	WIDTH	±.002 HEIGHT	WIRE

WIRE BARREL CRIMP

DO NOT SCALE PRINT.
UNLESS SPECIFIED
DIMENSIONS IN INCHES
TOLERANCES ON.
2 PLC DEC ± -
3 PLC DEC ± .010
ANGLES ± -

MATERIAL: 4M BRASS

FINISH: SEE TABLE

DR JR RUTH 8/3/88
CHK M FEHER 8/3/88
APPD C MEYERS 8/4/88
APPD R KUZO 8/4/88
PRODUCT SPEC –
APPLICATION SPEC –
WEIGHT –

AMP — AMP INCORPORATED, Harrisburg, Pa. 17105

NAME: RECEPTACLE, FASTON, FLAG, .250 SERIES TM

SIZE	FSCM NO	DRAWING NO
B	00779	63508
SCALE 5:1		SHEET 1 OF 1

CUSTOMER DRAWING

AMP 1470-15 REV 3-87

06-OCT-94 13:53:01 amp13469 /files/dept2121/dwg2121/u.faston-ceb/u.250-fl